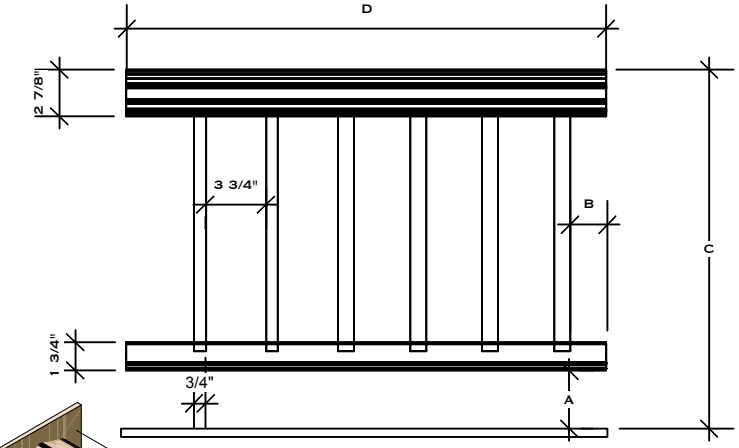

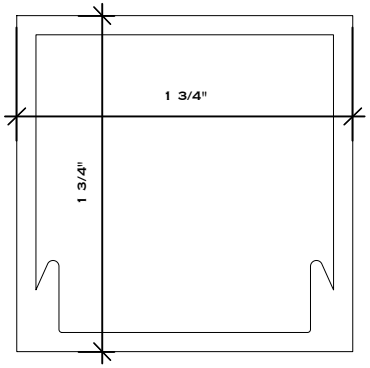

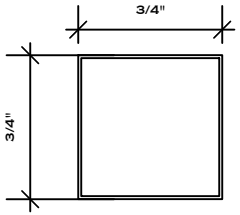

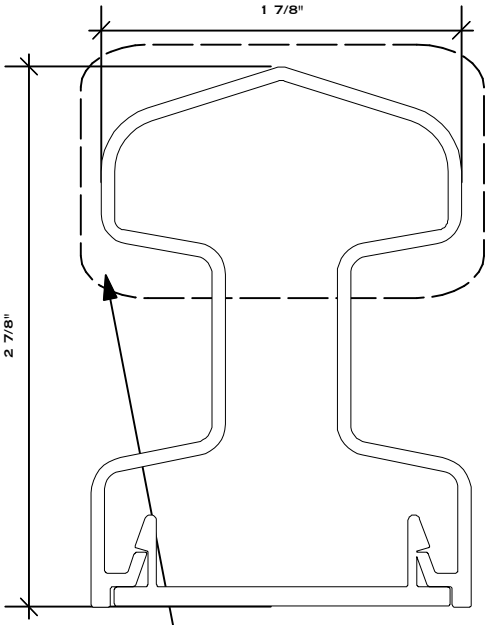

This is a graspable handrail per ADA/ICCode Perimeter less than 6.24" and dimension less than 2 -1/4".

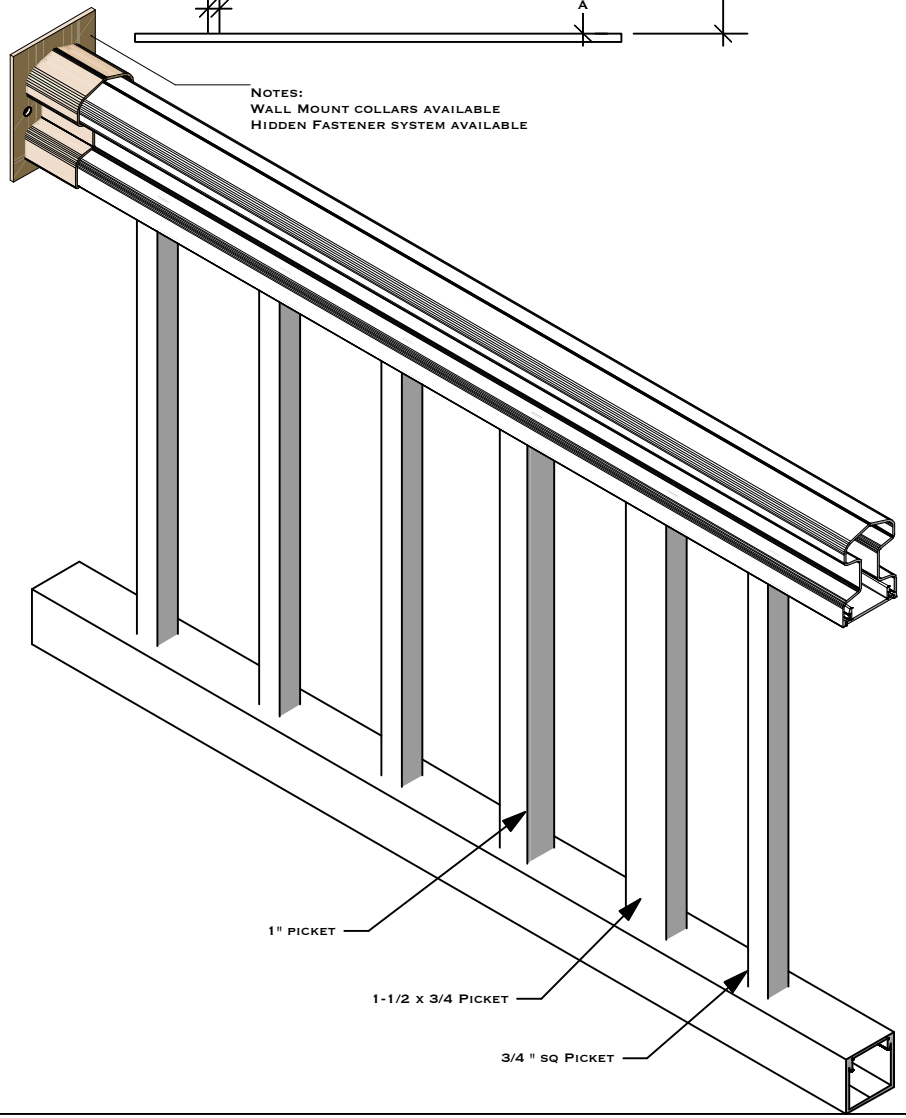

1

Virginia

Scale: Actual Size

Post:
Corner-Newel-Stair >2-1/2 sq
Inline Posts under > 1-3/4 sq

Manufactured by Hercules Custom Iron
36 W Pennsylvania Ave
Walkersville Md 21793
Voice 301-845-0808
Fax 301-845-0707